OVER HEAD CRANE(SINGLE)

OVER HEAD CRANE(SINGLE)

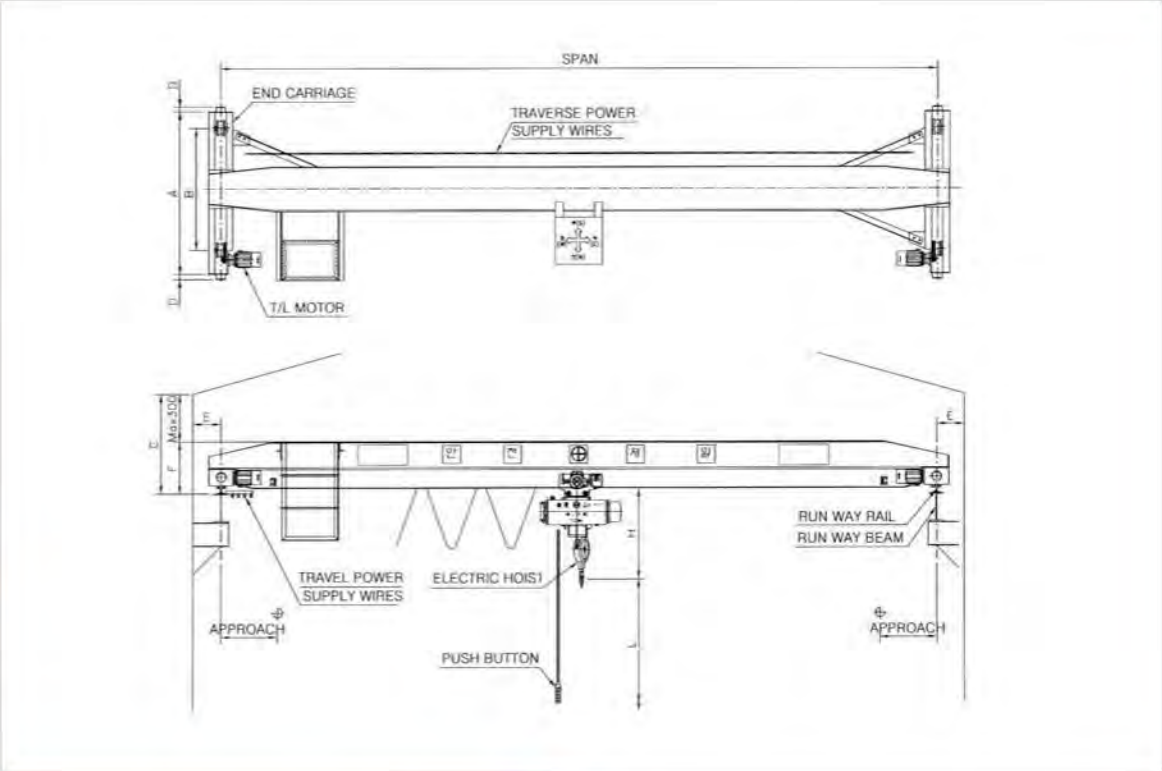

Specification(Single Girder With Mono Rail Hoist)

MODEL	CAPA-CITY(ton)	MAX SPAN(m)	LIFT (m)	SPEED/MOTOR(m/min)/(kw)			APPROX.DIMENSIONS(mm)							TRAVELING WHEEL(mmØ)	TRAVELING WHEEL(kg/m)
				HOISTING	TRAVERSING	TRAVELING	H	A	B	C	D	E	F		
OHS	1	8	6 or 9 or 12 or 18 or 24	8/1.5 or 12/2.2	16/0.5 or 24/0.75	16/0.75×2 (1/16) or 22/0.75×2 (1/11.8)	815	1500	1100	900	60	300	600	ø160	15
		12						2000	1600	950			650		
		16						2500	2100	1050			750		
		20						3200	2800	1150			850		
		24						3900	3500	1250			950		
OHS	2	8		6/1.5 or 10/3.7			960	1500	1100	1000			700		
		12						2000	1600	1000			700		
		16						2600	2100	1120			820		
		20						3300	2800	1180			880	ø200	22
		24						4000	3500	1300			1000		
OHS	3 (2.8)	8		4.5/2.8 or 9/5.5			1115	1500	1100	900			700	ø160	15
		12						2000	1600	1000			700		
		15						2500	2100	1100			820		
		17						3000	2600	1160			880	ø200	22
		20						3300	2800	1300			1000		
		24						4000	3500	1350			1050		
OHS	5	8		4.2/2.2 or 5.6/5.5			1325	1500	1100	1030			730	ø160	15
		10						1750	1350	1030			730		
		13						2250	1750	1180			880	ø200	22
		15						2500	2000	1180			880		
		17						2700	2200	1300			1000		
		19						3000	2500	1300			1000		
		24						3050	3500	1620			1320		
OHS	10 (7.5)	8		4.5/9 or 6/13	10/0.5×0 or 16/0.75×2	20/1.5×2 (1/10) or 30/1.5×2 (1/[illegible].8)	1520	2050	1500	1150			850	ø250	22
		12						2550	2000	1300			1000		
		16						3050	2500	1450			1150		
		20						3600	3000	1750			1450	ø315	30
		24						4100	3500	1950			1650		

OVER HEAD CRANE(DOUBLE)

OVER HEAD CRANE(DOUBLE)

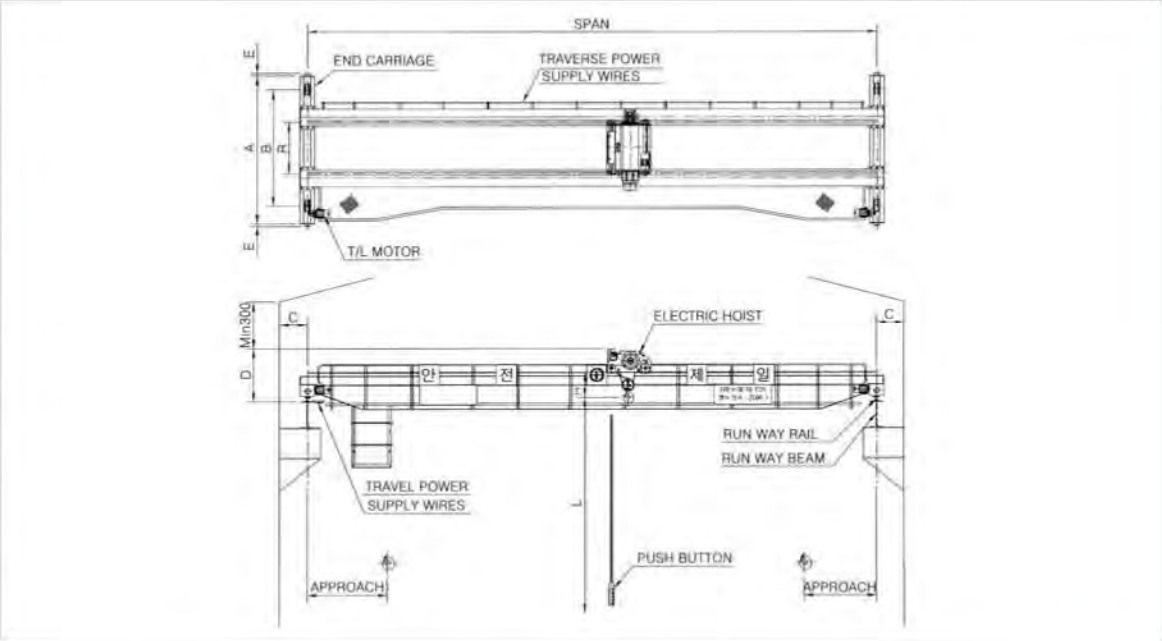

Specification(Double Girder With Double Rail Hoist)

MODEL	CAPA-CITY(ton)	MAX SPAN(m)	LIFT (m)	SPEED/MOTOR(m/min)/(kw) HOISTING	TRAVERSING	TRAVELING	APPROX.DIMENSIONS(mm) H	A	B	C	D	E	R	TRAVELING WHEEL(mmØ)	TRAVELING WHEEL(kg/m)
OHD	3	10	9 or 12 or 18 or 24	4.5/2.8 or 9/5.5	16/0.5 or 24/0.75	16/0.75 or22/0.75	420	2400	2000	250	1200	60	950	160	15
		15						3000	2500					200	
		20				20/1.5 (1/16) or 30/1.5 (1/11.8)		3550	3000	300	1300			250	22
		25						4050	3500						
		30						4600	4000		1400			315	
OHD	5	10		4.2/4.2 or 5.6/5.5			510	3000	2500		1250		1150	200	
		15						3000	2500		1350				
		20						3550	3000		1400			250	
		25						4100	3500		1500			315	
		30				20/1.5 or30/2.2		4850	4000	350	1600	100		400	
OHD	10	10		4.5/9 or 6/13	10/0.5 or 15/0.75	20/1.5 or30/1.5	750	3050	2500	300	1300	60		250	30
		15						3100	2500		1400			315	22
		20				20/1.5 or 30/2.2		3600	3000	350	2000	100		400	30
		25						4350	3500						
		30						4850	4000						
OHD	15	10		3/8.5 or 4.5/1.3	10/1 or 15/1.5		995	3350	2500				1200		
		15						3850	3000						
		20						4350	3500		2400				
		25						4950	4000	400				500	
		30						5500	4500					630	
OHD	20	10		2.8/11.5 or 4.2/17		20/1.5 or 30/2.2	1175	3850	3000	400	2000		1300	400	
		15						3850	3000		2400				
		20						4350	3500						
		25						4950	4000		2500			500	
		30				20/1.5 or 30/3.7		5500	4500		2300			630	
OHD	30	10		1.8/11.5 or 2.8/17	10/1 ×2 or 15/1.5 ×2		1480	4450	3500		2400		1800	500	
		15						5000	4000					630	
		27						5700	4500		2600			710	
		30						6300	5000	450				800	
OHD	50	10		3.2/33	10/1.5 ×2 or 1/2.2 ×2		1680	3800	2500		2900		2300	500 ×8	37
		15						5500	2900						
		22				20/2.2 ×4 or 30/3.7 ~5.5 ×4		6650	4000		3200	200		630 ×8	50
		30						7750	5000						
OHD	70	9		2.4/33	10/2.2 ×2 or 15/2.2 ×2		1780	5850	3300		3000		2800		50
		15						6000	3400						
		22						6650	4000		3300			710 ×8	73
		30						7750	5000						

SUSPENSION SIGLE GIRDER CRANE

SUSPENSION SIGLE GIRDER CRANE

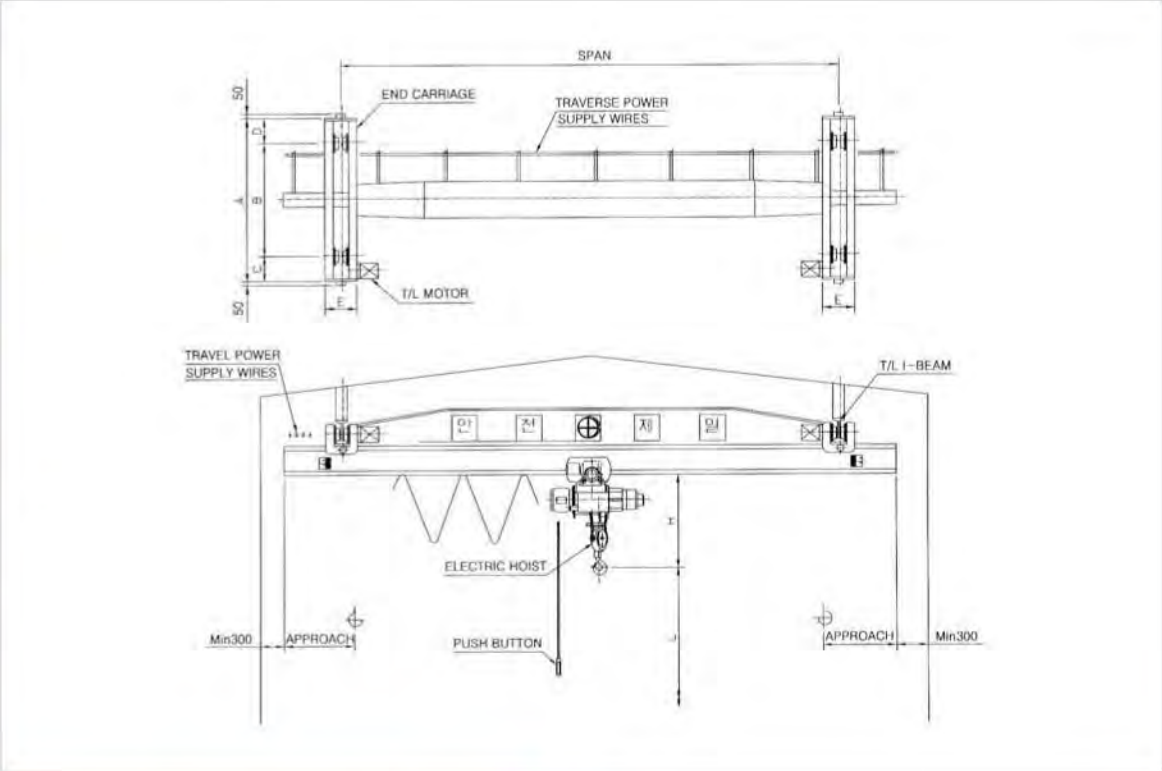

Specification(Single Girder With Mono Rail Hoist)

MODEL	CAPA-CITY(ton)	MAX SPAN(m)	LIFT (m)	SPEED/MOTOR(m/min)/(kw)			APPROX.DIMENSIONS(mm)						TRAVELING WHEEL(mmØ)	RUN WAY RAIL
				HOISTING	TRAVERSING	TRAVELING	H	A	B	C	D	E		
SCC	0.5	6	6 or 9 or 12	8/1.5 or 12/2.2	16/0.5 or 24/0.75	15/0.75/ 1/16 or 22/0.75/ 1/11.8	705	1200	800	280	120	320 (100)/ 345 (125)/ 370 (150)/ 395 (175)	Ø125	I-BEAM 200×100×7t/ 20×125×7.5t/ 300×10×10t/ 450×175×11t/ 600×190×13t
		9						1600	1200					
		12						2000	1600					
		15						2400	2000					
		18						2800	2400					
SCC	1	6		8/1.5 or 12/2.2			815	1200	800					
		9						1600	1200					
		12						2000	1600					
		15						2400	2000					
		18						2800	2400					
SCC	2	6		6/2.5 or 10/3.7			960	1200	800					
		9						1600	1200					
		12						2000	1600					
		15						2400	2000					
		18						2800	2400					
SCC	3 (7.5)	6		4.5/2.8 or 9/5.5			1115	1200	800					
		9						1600	1200					
		12						2000	1600					
		15						2500	2000	350	150	361 (125)/ 386 (150) 411 (175)	Ø160	
		18						2900	2400					
SCC	5	6		4.2/4.2 or 5.6/5.5			1520	1300	800					
		9						1700	1200					
		12						2100	1600	350	150	395 (125)/ 420 (150)/ 445 (175)	Ø180	
		15						2500	2000					
		18						2900	2400					

GANTRY CRANE

GANTRY CRANE

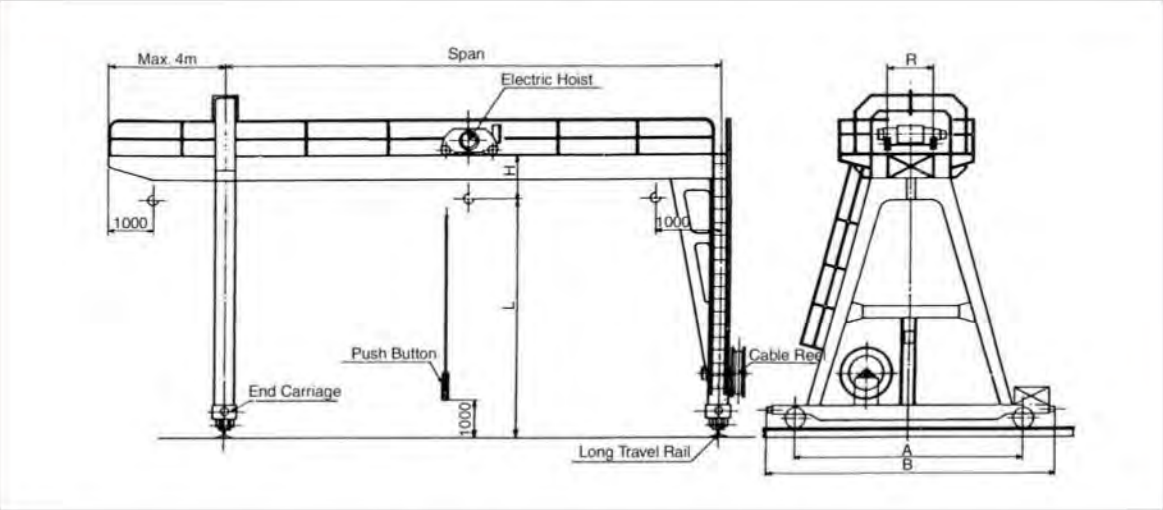

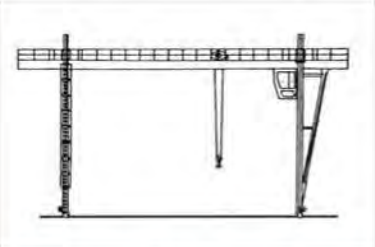

설치도 1

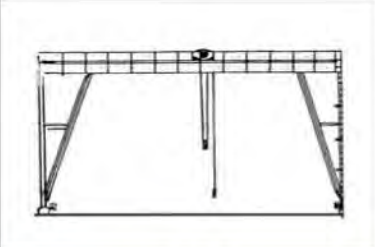

설치도 2

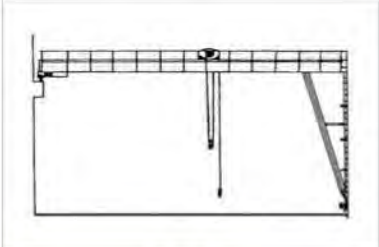

설치도 3

Specification(Double Girder With Double Rail Hoist)

MODEL	CAPA-CITY(ton)	MAX SPAN(m)	LIFT (m)	SPEED/MOTOR(m/min)/(kw) HOISTING	TRAVERSING	TRAVELING	APPROX.DIMENSIONS(mm) H	A	B	TRAVELING WHEEL(mmØ)	RUN WAY RAIL
GOC	1	7.5	6 or 9 or 12	6/1.1 or 12/2.2	16/0.2 or 24/0.4	22/0.75/1/11.8 or 16/0.75/1/16	815	3500 ~ 5000	4000 ~ 5500	200	15 22
		9									
		12									
		15									
		18									
		19.5									
		21									
		22									
GOC	2	7.5		5/1.8 or 10/3.7	16/0.5 or 24/0.75		980				
		9									
		12									
		15									
		17.5				30/1.5/1/11.8 or 20/1.5/1/16		3500 ~ 4050	4000 ~ 4550	250	
		18									
		20.5									
GOC	2.8	7.5		4.5/2.5 or 9/5.5		25/0.75/1/11.8or 16/0.75/1/16	1115	3500~ 5000	4000~ 5500	200	22 30
		9				30/1.5/1/11.8 or 20/1.5/1/16		3500 ~ 4050	4000 ~ 4550	250	
		12									
		15									
		17.5									
GOC	5	9		4.2/4.2 or 5.6/5.6			1325				
		12									
		14.5									
GOC	10	9		3/6 or 4.5/9			1520	4000 ~ 5000	4600 ~ 5600	315	30 37
		12									
		15									

SEMI GANTRY CRANE

SEMI GANTRY CRANE

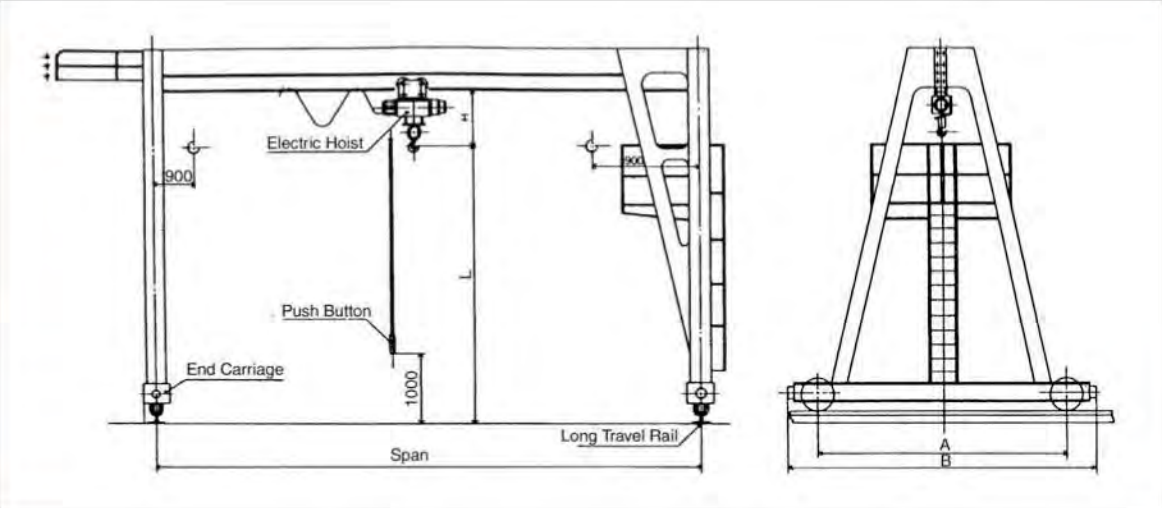

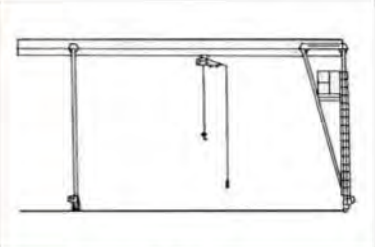

설치도 1

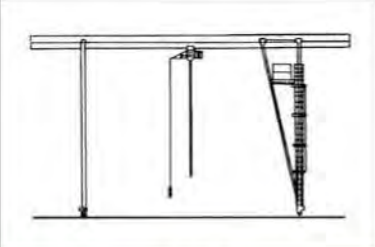

설치도 2

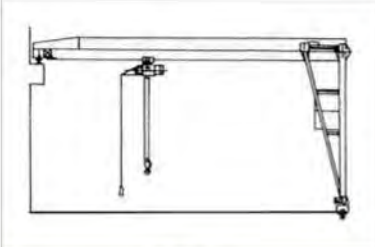

설치도 3

Specification(Double Girder With Double Rail Hoist)

MODEL	CAPA-CITY(ton)	MAX SPAN(m)	LIFT (m)	SPEED/MOTOR(m/min)/(kw)			APPROX.DIMENSIONS(mm)				TRAVELING WHEEL(mmØ)	RUN WAY RAIL
				HOISTING	TRAVERSING	TRAVELING	H	R	A	B		
SGC	3	15	9 or 12	4.5/2.5 or 9/5	16/0.5 or 24/0.75	20/1.5/ 1/16 or 30/1.5/ 1/11.8	420	950	4000 ~ 5000	4500 ~ 5500	250	22 30
		17.5										
		20										
SGC	5	10		4.2/4.2 or 5.6/5.5			510	1150				
		12.5										
		15										
		17.5							4000 ~ 5000	4600 ~ 5600	315	
		20										
SGC	10	10		3/6 or 4.5/9	10/0.5 or 15/0.75		750	1150				30 37
		12.5										
		15										
		17.5							4000~ 5000	4850~ 5850	400	
		20				20/1.5 or 30/2.2						
SGC	15	10		3/8.5 or 4.5/13	10/1 or 15/1.5		995	1200	4000 ~ 6000	4950 ~ 6950	500 630	
		12.5										
		15										
		17.5										
		20										
SGC	20	10		2.8/11.5 or 4.2/17	10/1×2 or 15/1.5×2	20/2.2 or 30/3.7	1175	1300				37
		12.5										
		15										
		17.5							4000 ~ 6000	5100 ~ 7100	630 710 800	
		20										
SGC	30	10		1.8/11.5 or 2.8/17			1480	1800				
		12.5										
		15							4000 ~ 6000	5200 ~ 7200		
		17.5										
		20										

JIB CRANE

1. Wall-Mounted Slewing Jibs

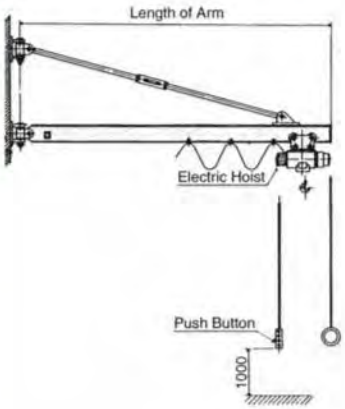

A. Wall-Mounted Slewing Jibs

Capacity		1/2ton~3ton
Working Area	Min.	0.8m
	Max.	6m
Traversing Speed		16m/min
Slewing	Speed	Manual
	Angle	180°

2. Wall-Travelling Jibs

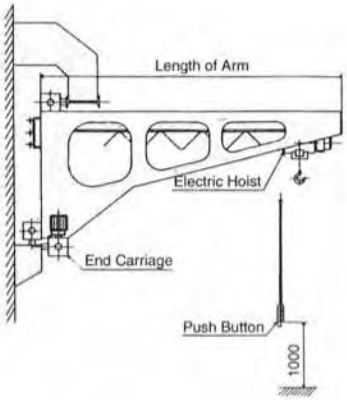

B. Wall-Traveling Jibs

Capacity	1/2ton~10ton
Length of Arm	Max.6m
Traversing Speed	16m.min
Traveling Speed	16m/min

3. Pillar-Mounted Slewing Jibs(A)

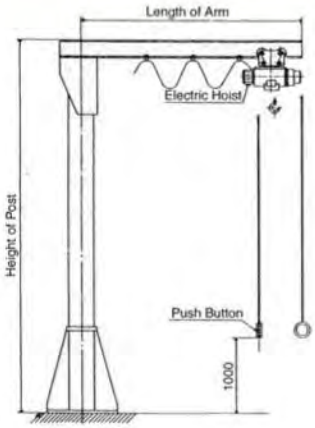

C. Pillar-Mounted Slewing Jibs(A)

Capacity		1/2ton~3ton
Working Area	Min.	0.8m
	Max.	3m
Traversing Speed		16m/min
Slewing	Speed	Manual
	Angle	360°
Height of Post		Max.6m

4. Pillar-Mounted Slewing Jibs(B)

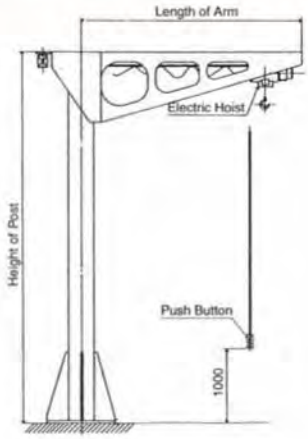

D. Pillar-Mounted Slewing Jibs(B)

Capacity		1/2ton~5ton
Working Area	Min.	0.8m
	Max.	6m
Traversing Speed		16m/min
Slewing	Speed	0.5rpm
	Angle	360°
Height of Post		Max.6m

MONO-RAIL CRANE

I-BEAM A×B×t	중량 kg/m	관성모멘트 ㎝⁴	단면계수 ㎥	SPAN(m)						
				0.5ton	1ton	2ton	3ton	5ton	7.5ton	10ton
★ 150×75×5.5	17.1	1820	109	3.15	2.34					
180×100×6	23.6	2670	188	4.50	3.34					
★ 200×100×7	26.3	5180	218	5.8	4.1	2.9	2.3			
★ 250×125×7.5	38.0	7190	415	8.9	6.3	4.4	3.6			
250×125×10	55.5	9340	587	9.49	7.00	4.99	4.11			
★ 300×150×10	48.3	4500	633	14.0	9.9	7.0	5.7	4.4	2.57	2.57
300×150×11.5	76.8	15700	981		9.93	7.06	5.82	4.43	3.70	3.19
350×150×9	58.5	12200	871		10.10	7.18	5.92	4.50	3.76	3.25
350×150×12	87.2	24500	1280		12.29	8.73	7.21	5.48	4.58	3.95
400×150×10	72.0	21000	1200		12.69	9.02	7.44	5.66	4.73	4.08
400×150×12.5	95.8	39700	1580			10.37	8.56	6.50	5.43	4.69
450×175×11	91.7	39200	1740			11.53	9.51	7.23	6.04	5.22
450×175×13	115.0	48800	2170			12.86	10.26	8.07	6.74	5.82
500×190×11.5	111.0	59600	2380			14.22	11.73	8.92	7.45	6.44
600×190×13	133.0	98200	3270				15.06	11.45	9.57	8.26

주의 : ★표시만 국내 생산품임(그 외는 수입품임)

Suspension Type

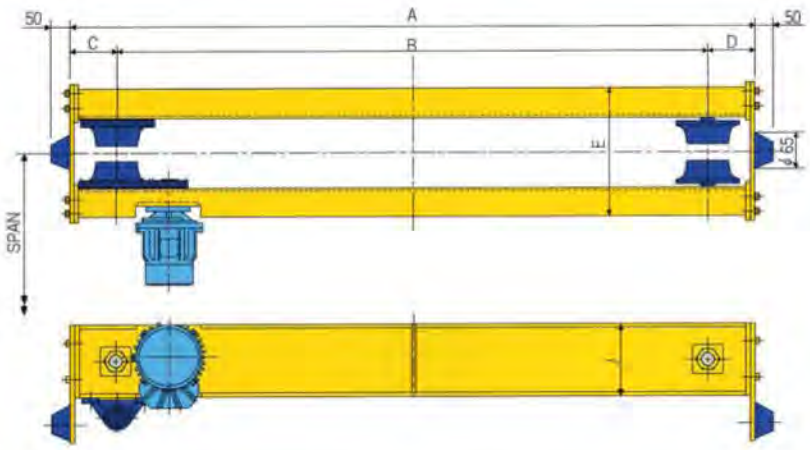

TYPE \ ITEM	Travelling speed (m/min)		Motor (Kw×P)	A	B	C	D	E	J	Travelling Rail (I-Beam)
Ø125	Low	14	0.5Kw×6P	1650	1250	120	280	320	150	I 200×100×7t
				1900	1500			345		I 250×125×7.5t
	High	20	0.75Kw×4P	2400	2000			370		I 300×150×10t
Ø160	Low	14	0.5Kw×6P	2000	1500	150	300	360	200	I 200×100×7t
				2500	2000			386		I 250×125×7.5t
	High	20	0.75Kw×4P	3000	2500			386		I 300×150×10t

Over Head Type

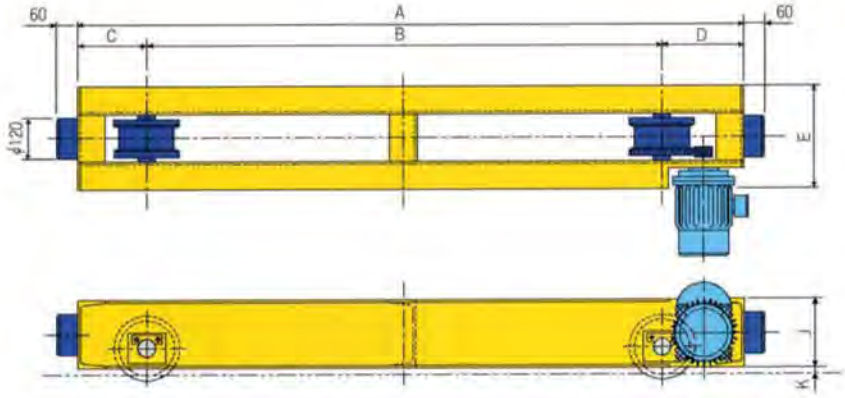

TYPE \ ITEM	Travelling speed (m/min)		Motor (Kw×P)	A	B	C	D	E	J	K	Travelling Rail (I-Beam)
Ø160	Low	16	0.5Kw×6P	1940	1500	200	240	300	200	20	15, 22
				2440	2000						
	High	24	0.75Kw×4P	2940	2500						
Ø200	Low	18	0.5Kw×6P	1950	1500	200	250	300	200	20	15, 22
				2450	2000						
	High	26	0.75Kw×4P	2950	2500						
Ø250	Low	16	1Kw×6P	2000	1500	220	280	310	200	25	15, 22, 30
				2500	2000						
	High	24	1.5Kw×4P	3000	2500						
Ø315	Low	20	1Kw×6P	2720	2000	250	350	340	250	32.5	22, 30, 37
				3220	2500						
	High	30	1.5Kw×4P	3720	3000						

CRANE COMPONENTS

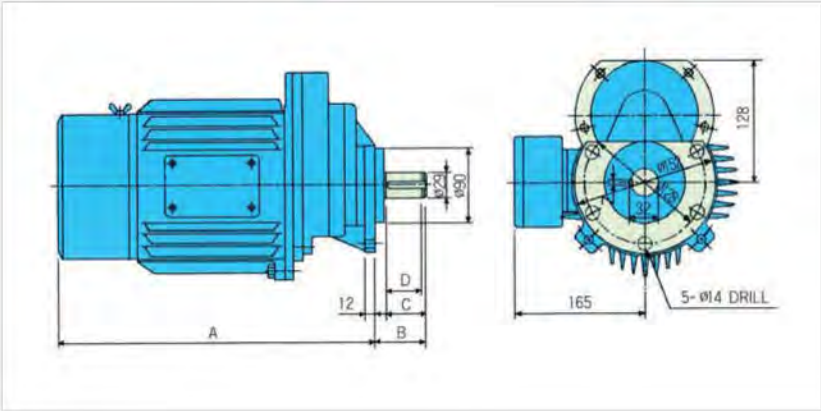

Model-A		
Dimensions \ Cap.	0.5kW×6p 0.75kW×4p	1kW×6p 1.5kW×4p
A	352	387
B	87	87
C	64	64
D	60	60
RATIO	1/12.12	1/16.3

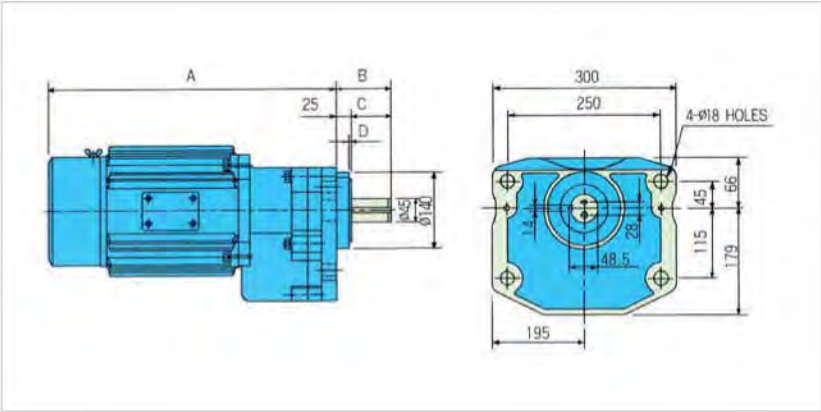

Model-B		
Dimensions \ Cap.	1.5kW×6p	2.2kW×4p
A	550	550
B	84	84
C	59	59
D	5	5
RATIO	1/20. 26	

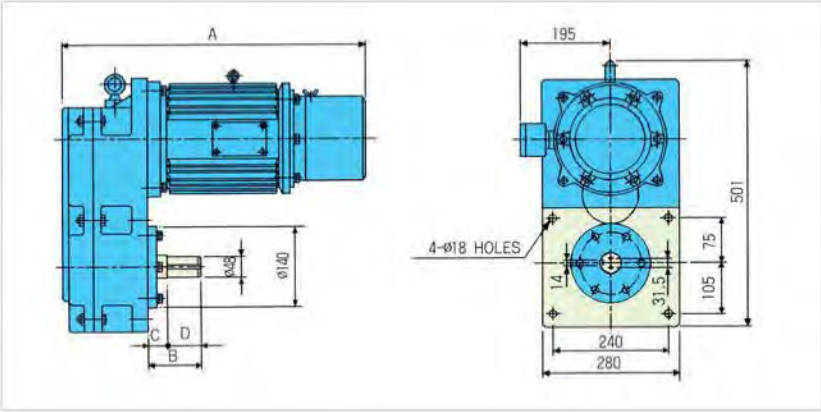

Model-C		
Dimensions \ Cap.	2.2kW×6p	3.7kW×4p
A	650	650
B	95	95
C	35	35
D	60	60
RATIO	1/22	

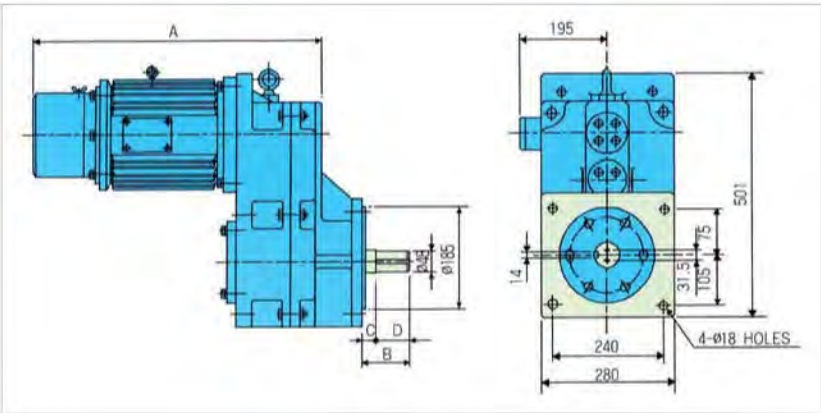

Model-D		
Dimensions \ Cap.	2.2kW×6p	3.7kW×4p
A	650	650
B	105	105
C	41	41
D	64	64
RATIO	1/22	